ProfileMaster *plus AL*

Light Crane System

Lightweight meets heavyweight

The aluminum, lightweight crane system ProfileMaster *plus AL* features a heavy, 2-ton load capacity and reduced own weight with low operating costs and highly efficient, on-site assembly. Its innovative connection system handles heavy loads so you can create optimal suspension distances and spans. All components are presorted on delivery. Choose from six different aluminum profile types in four sizes. Two of these profiles are additionally equipped with an internal conductor line.

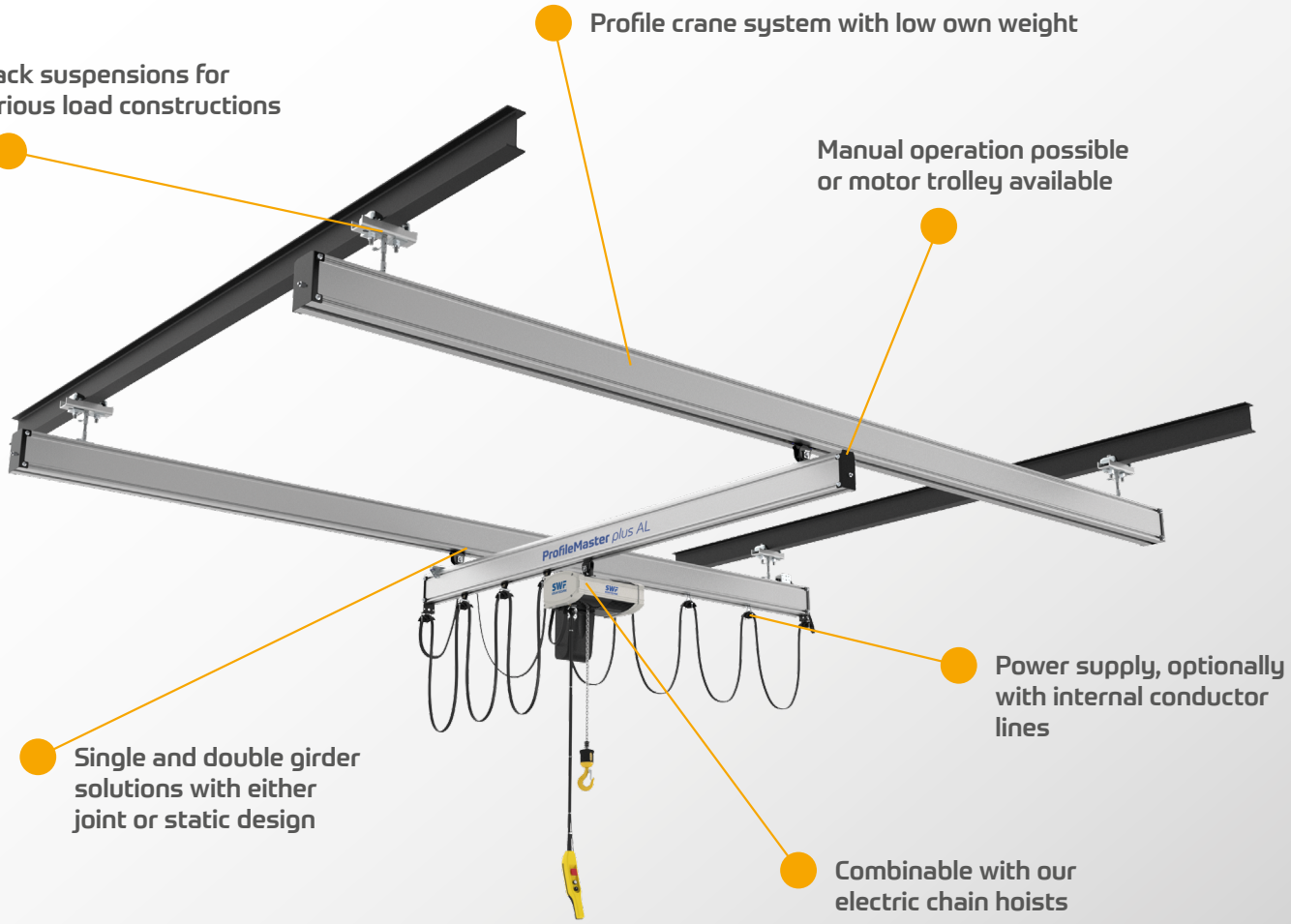

ProfileMaster *plus AL*

Light Crane System

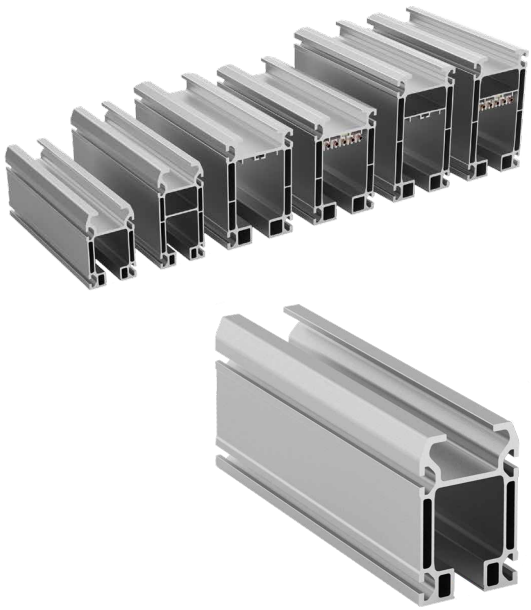

High quality made in Germany

- Highly durable material
- Low own weight
- Reduced operating noise

Gentle load handling

- Smooth movements
- Easy travelling
- Specially designed, high-performance running wheels

Tailor-made system

- Suitable for use in building structures with low static load capacities
- Simple, time-saving assembly
- Optimized number of suspensions

www.swfkrantechnik.com